Chapter 8
DNS and DHCP

DNS Concepts

Why we need DNS Server?

Withot DNS Server

```
[root@linuxfedora ~]# cat /etc/hosts
127.0.0.1                   localhost.localdomain localhost
::1                 localhost6.localdomain6 localhost6
[root@linuxfedora ~]#
```

```
cat /etc/hosts
# Do not remove the following line, or various
programs
# that require network functionality will fail.
127.0.0.1 template.x.com template
localhost.localdomain localhost
```

::1 localhost6.localdomain6 localhost6

192.168.1.16 x.raja.com

192.168.11.19 mail.raja.com

12.18.11.28 www.raja.com

Zone files and DNS Server

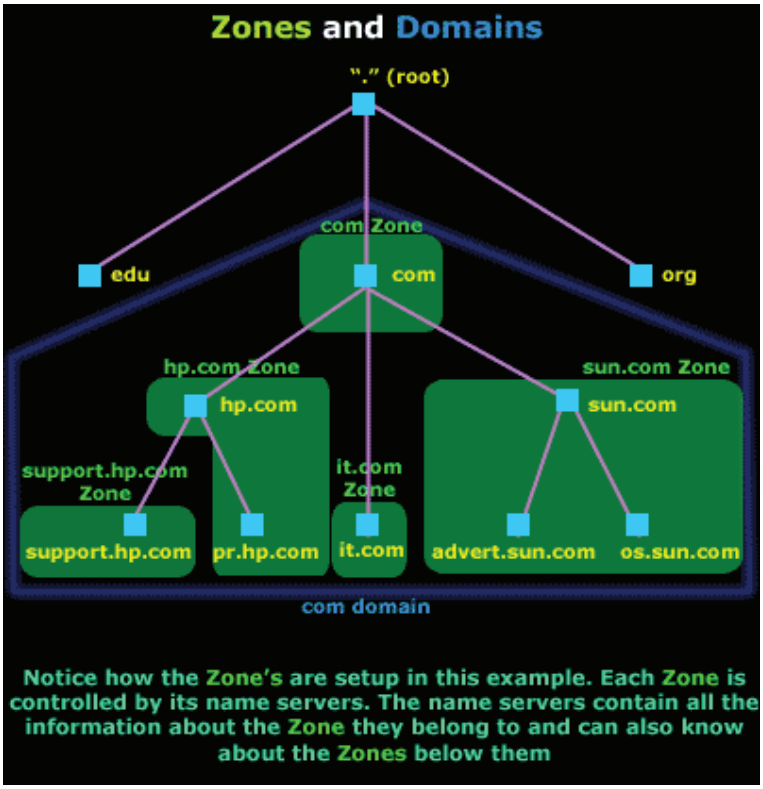

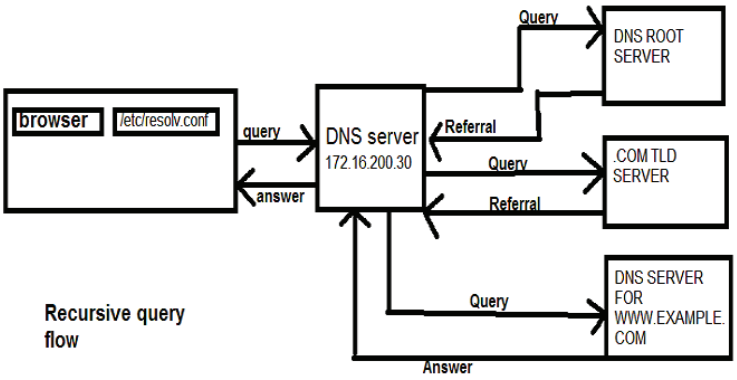
browser
/etc/resolv.conf
query
answer
DNS server
172.16.200.30
Query
DNS ROOT SERVER
Referral
Query
.COM TLD SERVER
Referral
Query
DNS SERVER FOR WWW.EXAMPLE.COM
Answer
Recursive query flow

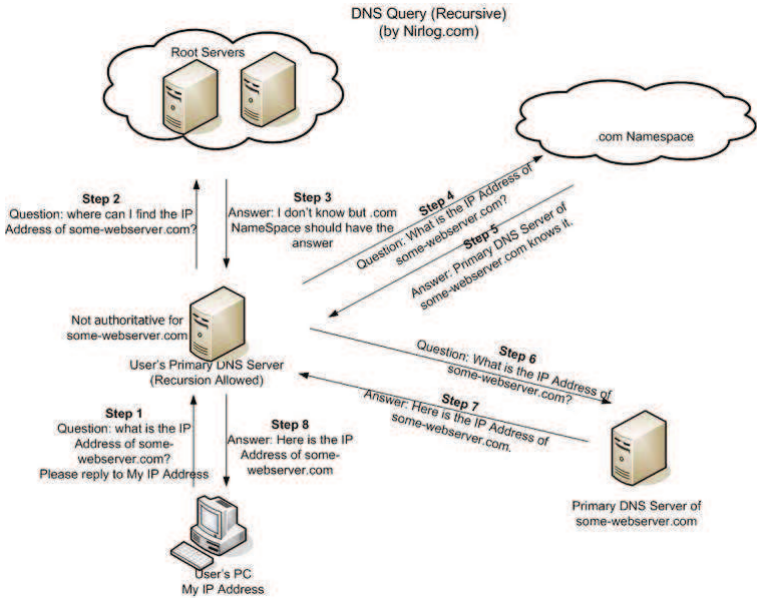
DNS Query (Recursive)
(by Nirlog.com)
Root Servers
.com Namespace
Step 2
Question: where can I find the IP Address of some-webserver.com?
Step 3
Answer: I don't know but .com NameSpace should have the answer
Step 4
Question: What is the IP Address of some-webserver.com?
Step 5
Answer: Primary DNS Server of some-webserver.com knows it.
Not authoritative for some-webserver.com
User's Primary DNS Server (Recursion Allowed)
Step 6
Question: What is the IP Address of some-webserver.com?
Step 7
Answer: Here is the IP Address of some-webserver.com.
Step 1
Question: what is the IP Address of some-webserver.com? Please reply to My IP Address
Step 8
Answer: Here is the IP Address of some-webserver.com
Primary DNS Server of some-webserver.com
User's PC
My IP Address

Resource Record	Description
SOA (Start of Authority)	Indicates that the server is the best authoritative source for data concerning the zone. Each zone must have an SOA record, and only one SOA record can be in a zone.
NS (Name Server)	Identifies a DNS server functioning as an authority for the zone. Each DNS server in the zone (whether primary master or secondary) must be represented by an NS record.
A (Address)	Provides a name-to-address mapping that supplies an IPv4 address for a specific DNS name. This record type performs the primary function of the DNS: converting names to addresses
AAAA (Address)	Provides a name-to-address mapping that supplies an IPv6 address for a specific DNS name. This record type performs the primary function of the DNS: converting names to addresses.
PTR (Pointer)	Provides an address-to-name mapping that supplies a DNS name for a specific address in the in-addr.arpa domain. This is the functional opposite of an A record, used for reverse lookups only.
CNAME (Canonical Name)	Creates an alias that points to the canonical name (that is, the "real" name) of a host identified by an A record. Administrators use CNAME records to provide alternative names by which systems can be identified.
MX (Mail Exchange)	Identifies a system that will direct email traffic sent to an address in the domain to the individual recipient, a mail gateway, or another mail server.

```
$TTL 1d                                          ⇒ Default TTL of 1 day
$ORIGIN example.com.                             ⇒ Default FQDN to attach
@ IN SOA ns1.example.com. admin.example.com. (
        2013091200 ; se = serial number
        12h ; ref = refresh
        15m ; ret = refresh retry                ⇒ SOA (Start of Authority)
        3w ; ex = expiry
        2h ; nx = nxdomain ttl
        )
    IN  NS   ns1.example.com.
    IN  NS   ns2.example.net.                    ⇒ NS record
3w  IN MX 10 mail.example.com.
    IN MX 20 mail.example.net.                   ⇒ MX record
ns1     IN   A    172.16.140.41
mail    IN   A    172.16.140.42
joe     IN   A    172.16.140.43                  ⇒ A record
www     IN   A    172.16.140.44
ftp     IN CNAME  ftp.example.net.               ⇒ CNAME record
```

how dns works

http://www.slashroot.in/how-dns-works

[root@linuxfedora ~]# dig +trace www.google.com

; <<>> DiG 9.10.3-P3-RedHat-9.10.3-10.P3.fc23 <<>> +trace www.google.com

;; global options: +cmd

. 9532 IN NS d.root-servers.net.

. 9532 IN NS j.root-servers.net.

. 9532 IN NS m.root-servers.net.

. 9532 IN NS e.root-servers.net.

. 9532 IN NS f.root-servers.net.

. 9532 IN NS c.root-servers.net.

. 9532 IN NS h.root-servers.net.

. 9532 IN NS g.root-servers.net.

```
.                       9532    IN      NS      k.root-
servers.net.
.                       9532    IN      NS      l.root-
servers.net.
.                       9532    IN      NS      a.root-
servers.net.
.                       9532    IN      NS      i.root-
servers.net.
.                       9532    IN      NS      b.root-
servers.net.
;; Received 460 bytes from 192.168.7.1#53(192.168.7.1)
in 1 ms

com.                    172800          IN      NS      l.gtld-
servers.net.
com.                    172800          IN      NS      a.gtld-
servers.net.
com.                    172800          IN      NS
        g.gtld-servers.net.
com.                    172800          IN      NS      j.gtld-
servers.net.
com.                    172800          IN      NS
        h.gtld-servers.net.
```

com. 172800 IN NS d.gtld-servers.net.

com. 172800 IN NS b.gtld-servers.net.

com. 172800 IN NS m.gtld-servers.net.

com. 172800 IN NS i.gtld-servers.net.

com. 172800 IN NS f.gtld-servers.net.

com. 172800 IN NS e.gtld-servers.net.

com. 172800 IN NS c.gtld-servers.net.

com. 172800 IN NS k.gtld-servers.net.

com. 86400 IN DS 30909 8 2 E2D3C916F6DEEAC73294E8268FB5885044A833FC54 59588F4A9184CF C41A5766

com. 86400 IN RRSIG DS 8 1 86400 20161017050000 20161004040000 39291 . XYjYLC7xG5vEb9pblGMVIZCZHdPdB2OvsjTI5G1flwf pmad+YhKnUqyN 2KsJWm09p5AW2SenmbEBXjm+zZgTXBt7Z3gA5C1n BsJkiZxhPBIl/C6T

Fs0mFeOpSgLT0sEYkm/OpgwJm2LM0pgkm9ewcaFRP
vTqiYCZmOFLZkBP
eJp1mfMHCgwwjesBxXixr17mKEVONYrxdPUdrIPwNz
Xb2ZqExNoN1+4z
5Z7qhpoD9+k2KDfSgTtTx+BVJsjqVTYj1vtkae+NSTMe
SSH3RtmgeBSs
GfZ5CyB6oMNEbej9GsSwJjW4Rpw2CXUKc3i1EN0zT
YOSBiQGAXkBAKH0 /6WwSQ==

;; Received 866 bytes from 192.36.148.17#53(i.root-servers.net) in 1763 ms

google.com. 172800 IN NS ns2.google.com.

google.com. 172800 IN NS ns1.google.com.

google.com. 172800 IN NS ns3.google.com.

google.com. 172800 IN NS ns4.google.com.

CK0POJMG874LJREF7EFN8430QVIT8BSM.com. 86400 IN NSEC3 1 1 0 - CK0Q1GIN43N1ARRC9OSM6QPQR81H5M9A NS SOA RRSIG DNSKEY NSEC3PARAM

CK0POJMG874LJREF7EFN8430QVIT8BSM.com. 86400 IN RRSIG NSEC3 8 2 86400 20161009044157

20161002033157 27452 com. M41sYMa1AlSgKf/CWelF3cJ4O2uGYGJEWlS1b8b2Wl sMKCXnhK/rYlrb FAtAWNcgyzdspmEEZtRcZqLj4x4Oizr3zHPz2EM18IPu DsSdeIIHV70y gwEnInozpTeqk1A0u/fVVSDpfcurgcZcW9bGbu74cLlg9 KZ+J2V//br1 +7w=

S84AE3BIT99DKIHQH27TRC0584HV5KOH.com. 86400 IN NSEC3 1 1 0 - S84J17P3PT4RKMEJOHNGD73C5Q5NV5S9 NS DS RRSIG

S84AE3BIT99DKIHQH27TRC0584HV5KOH.com. 86400 IN RRSIG NSEC3 8 2 86400 20161011044630 20161004033630 27452 com. jS48lJO+/4fRTdvb//Mk+r9+MglfhwHagL11fhTbRJTMZ 8qSmEc9Jccw ppRWsS2VDiyiemuMgC8ZzY4bhAMfiWx648BOgVWU WVsh4m3Q6EewUuDO ZT12d6l0RZR5O13SwrKFCBcgHrlI+up2UQuxG40UKZ LJQP75R0Is2Wlo Tqk=

;; Received 664 bytes from 192.41.162.30#53(l.gtld-servers.net) in 1659 ms

www.google.com. 300 IN A 172.217.16.196

;; Received 48 bytes from 216.239.34.10#53(ns2.google.com) in 1629 ms

[root@linuxfedora ~]#

[root@linuxfedora ~]# dnstracer -s . -4 -o www.google.com

bash: dnstracer: command not found...

^C

[root@linuxfedora ~]# dnf install dnstracer

Failed to synchronize cache for repo 'google-chrome' from 'http://dl.google.com/linux/chrome/rpm/stable/i386': repomd.xml parser error: Parse error at line: 1 (syntax error), disabling.

Last metadata expiration check performed 1:36:27 ago on Tue Oct 4 18:03:19 2016.

Dependencies resolved.

==========

Package Arch Version Repository Size

```
================================================
================================================
================================================
=====================================
Installing:
 dnstracer                  i686                  1.9-
13.fc23                  fedora                  30 k


Transaction Summary
================================================
================================================
================================================
=====================================
Install  1 Package


Total download size: 30 k
Installed size: 41 k
Is this ok [y/N]: y
Downloading Packages:
dnstracer-1.9-13.fc23.i686.rpm
4.2 kB/s |  30 kB     00:07
```

```
--------------------------------------------------------------------
--------------------------------------------------------------------
-----------------
Total
1.5 kB/s |  30 kB     00:20
Running transaction check
Transaction check succeeded.
Running transaction test
Transaction test succeeded.
Running transaction
  Installing        :  dnstracer-1.9-13.fc23.i686
1/1
  Verifying         :  dnstracer-1.9-13.fc23.i686
1/1

Installed:
  dnstracer.i686 1.9-13.fc23

Complete!
[root@linuxfedora ~]# dnstracer -s . -4 -o
www.google.com
Tracing to www.google.com[a] via A.ROOT-
SERVERS.NET, maximum of 3 retries
```

```
A.ROOT-SERVERS.NET [.] (198.41.0.4)
 |\___ m.gtld-servers.net [com] (192.55.83.30)
 |     |\___ ns4.google.com [google.com] (216.239.38.10)
Got authoritative answer
 |     |\___ ns3.google.com [google.com] (216.239.36.10)
Got authoritative answer
 |     |\___ ns1.google.com [google.com] (216.239.32.10)
Got authoritative answer
 |      \___ ns2.google.com [google.com] (216.239.34.10)
Got authoritative answer
 |\___ l.gtld-servers.net [com] (192.41.162.30)
 |     |\___ ns4.google.com [google.com] (216.239.38.10)
(cached)
 |     |\___ ns3.google.com [google.com] (216.239.36.10)
(cached)
 |     |\___ ns1.google.com [google.com] (216.239.32.10)
(cached)
 |      \___ ns2.google.com [google.com] (216.239.34.10)
(cached)
 |\___ k.gtld-servers.net [com] (192.52.178.30)
 |     |\___ ns4.google.com [google.com] (216.239.38.10)
(cached)
```

```
|       |\___ ns3.google.com [google.com] (216.239.36.10)
(cached)
|       |\___ ns1.google.com [google.com] (216.239.32.10)
(cached)
|        \___ ns2.google.com [google.com] (216.239.34.10)
(cached)
|\___ j.gtld-servers.net [com] (192.48.79.30)
|       |\___ ns4.google.com [google.com] (216.239.38.10)
(cached)
|       |\___ ns3.google.com [google.com] (216.239.36.10)
(cached)
|       |\___ ns1.google.com [google.com] (216.239.32.10)
(cached)
|        \___ ns2.google.com [google.com] (216.239.34.10)
(cached)
|\___ i.gtld-servers.net [com] (192.43.172.30)
|       |\___ ns4.google.com [google.com] (216.239.38.10)
(cached)
|       |\___ ns3.google.com [google.com] (216.239.36.10)
(cached)
|       |\___ ns1.google.com [google.com] (216.239.32.10)
(cached)
|        \___ ns2.google.com [google.com] (216.239.34.10)
(cached)
```

```
|\___ h.gtld-servers.net [com] (192.54.112.30)
|     |\___ ns4.google.com [google.com] (216.239.38.10) (cached)
|     |\___ ns3.google.com [google.com] (216.239.36.10) (cached)
|     |\___ ns1.google.com [google.com] (216.239.32.10) (cached)
|      \___ ns2.google.com [google.com] (216.239.34.10) (cached)
|\___ g.gtld-servers.net [com] (192.42.93.30)
|     |\___ ns4.google.com [google.com] (216.239.38.10) (cached)
|     |\___ ns3.google.com [google.com] (216.239.36.10) (cached)
|     |\___ ns1.google.com [google.com] (216.239.32.10) (cached)
|      \___ ns2.google.com [google.com] (216.239.34.10) (cached)
|\___ f.gtld-servers.net [com] (192.35.51.30)
|     |\___ ns4.google.com [google.com] (216.239.38.10) (cached)
|     |\___ ns3.google.com [google.com] (216.239.36.10) (cached)
```

```
|       |\___ ns1.google.com [google.com] (216.239.32.10)
(cached)
|        \___ ns2.google.com [google.com] (216.239.34.10)
(cached)
|\___ e.gtld-servers.net [com] (192.12.94.30)
|       |\___ ns4.google.com [google.com] (216.239.38.10)
(cached)
|       |\___ ns3.google.com [google.com] (216.239.36.10)
(cached)
|       |\___ ns1.google.com [google.com] (216.239.32.10)
(cached)
|        \___ ns2.google.com [google.com] (216.239.34.10)
(cached)
|\___ d.gtld-servers.net [com] (192.31.80.30)
|       |\___ ns4.google.com [google.com] (216.239.38.10)
(cached)
|       |\___ ns3.google.com [google.com] (216.239.36.10)
(cached)
|       |\___ ns1.google.com [google.com] (216.239.32.10)
(cached)
|        \___ ns2.google.com [google.com] (216.239.34.10)
(cached)
|\___ c.gtld-servers.net [com] (192.26.92.30)
```

```
|       |\___ ns4.google.com [google.com] (216.239.38.10)
(cached)

|       |\___ ns3.google.com [google.com] (216.239.36.10)
(cached)

|       |\___ ns1.google.com [google.com] (216.239.32.10)
(cached)

|        \___ ns2.google.com [google.com] (216.239.34.10)
(cached)

|\___ b.gtld-servers.net [com] (192.33.14.30)

|       |\___ ns4.google.com [google.com] (216.239.38.10)
(cached)

|       |\___ ns3.google.com [google.com] (216.239.36.10)
(cached)

|       |\___ ns1.google.com [google.com] (216.239.32.10)
(cached)

|        \___ ns2.google.com [google.com] (216.239.34.10)
(cached)

|\___ a.gtld-servers.net [com]
(2001:0503:a83e:0000:0000:0000:0002:0030) Not queried

 \___ a.gtld-servers.net [com] (192.5.6.30)

     |\___ ns4.google.com [google.com] (216.239.38.10)
(cached)

     |\___ ns3.google.com [google.com] (216.239.36.10)
(cached)
```

|___ ns1.google.com [google.com] (216.239.32.10) (cached)

___ ns2.google.com [google.com] (216.239.34.10) (cached)

ns2.google.com (216.239.34.10) www.google.com -> 172.217.16.196

ns1.google.com (216.239.32.10) www.google.com -> 172.217.16.196

ns3.google.com (216.239.36.10) www.google.com -> 172.217.16.196

ns4.google.com (216.239.38.10) www.google.com -> 172.217.16.196

[root@linuxfedora ~]# dig -4 maps.google.com. +norecurse +trace

; <<>> DiG 9.10.3-P3-RedHat-9.10.3-10.P3.fc23 <<>> -4 maps.google.com. +norecurse +trace

;; global options: +cmd

. 9647 IN NS i.root-servers.net.

. 9647 IN NS b.root-servers.net.

```
.                       9647   IN      NS      d.root-
servers.net.
.                       9647   IN      NS      j.root-
servers.net.
.                       9647   IN      NS      m.root-
servers.net.
.                       9647   IN      NS      e.root-
servers.net.
.                       9647   IN      NS      f.root-
servers.net.
.                       9647   IN      NS      c.root-
servers.net.
.                       9647   IN      NS      h.root-
servers.net.
.                       9647   IN      NS      g.root-
servers.net.
.                       9647   IN      NS      k.root-
servers.net.
.                       9647   IN      NS      l.root-
servers.net.
.                       9647   IN      NS      a.root-
servers.net.
;; Received 460 bytes from 192.168.7.1#53(192.168.7.1)
in 1 ms
```

```
com.                    172800      IN      NS      j.gtld-
servers.net.
com.                    172800      IN      NS      i.gtld-
servers.net.
com.                    172800      IN      NS      c.gtld-
servers.net.
com.                    172800      IN      NS
        h.gtld-servers.net.
com.                    172800      IN      NS      f.gtld-
servers.net.
com.                    172800      IN      NS
        g.gtld-servers.net.
com.                    172800      IN      NS
        m.gtld-servers.net.
com.                    172800      IN      NS      e.gtld-
servers.net.
com.                    172800      IN      NS      l.gtld-
servers.net.
com.                    172800      IN      NS
        b.gtld-servers.net.
com.                    172800      IN      NS
        k.gtld-servers.net.
```

com. 172800 IN NS a.gtld-servers.net.

com. 172800 IN NS d.gtld-servers.net.

com. 86400 IN DS 30909 8 2 E2D3C916F6DEEAC73294E8268FB5885044A833FC5459588F4A9184CF C41A5766

com. 86400 IN RRSIGDS 8 1 86400 20161017050000 20161004040000 39291 . XYjYLC7xG5vEb9pblGMVIZCZHdPdB2OvsjTI5G1flwfpmad+YhKnUqyN 2KsJWm09p5AW2SenmbEBXjm+zZgTXBt7Z3gA5C1n BsJkiZxhPBIl/C6T Fs0mFeOpSgLT0sEYkm/OpgwJm2LM0pgkm9ewcaFRP vTqiYCZmOFLZkBP eJp1mfMHCgwwjesBxXixr17mKEVONYrxdPUdrIPwNz Xb2ZqExNoN1+4z 5Z7qhpoD9+k2KDfSgTtTx+BVJsjqVTYj1vtkae+NSTMe SSH3RtmgeBSs GfZ5CyB6oMNEbej9GsSwJjW4Rpw2CXUKc3i1EN0zT YOSBiQGAXkBAKH0 /6WwSQ==

;; Received 867 bytes from 192.5.5.241#53(f.root-servers.net) in 1756 ms

google.com. 172800 IN NS ns2.google.com.

google.com. 172800 IN NS ns1.google.com.

google.com. 172800 IN NS ns3.google.com.

google.com. 172800 IN NS ns4.google.com.

CK0POJMG874LJREF7EFN8430QVIT8BSM.com. 86400 IN NSEC3 1 1 0 - CK0Q1GIN43N1ARRC9OSM6QPQR81H5M9A NS SOA RRSIG DNSKEY NSEC3PARAM

CK0POJMG874LJREF7EFN8430QVIT8BSM.com. 86400 IN RRSIG NSEC3 8 2 86400 20161009044157 20161002033157 27452 com. M41sYMa1AlSgKf/CWelF3cJ4O2uGYGJEWlS1b8b2Wl sMKCXnhK/rYlrb FAtAWNcgyzdspmEEZtRcZqLj4x4Oizr3zHPz2EM18IPu DsSdeIIHV70y gwEnInozpTeqk1A0u/fVVSDpfcurgcZcW9bGbu74cLlg9 KZ+J2V//br1 +7w=

S84AE3BIT99DKIHQH27TRC0584HV5KOH.com. 86400 IN NSEC3 1 1 0 - S84J17P3PT4RKMEJOHNGD73C5Q5NV5S9 NS DS RRSIG

S84AE3BIT99DKIHQH27TRC0584HV5KOH.com. 86400 IN RRSIG NSEC3 8 2 86400 20161011044630 20161004033630 27452 com.

jS48lJO+/4fRTdvb//Mk+r9+MglfhwHagL11fhTbRJTMZ
8qSmEc9Jccw
ppRWsS2VDiyiemuMgC8ZzY4bhAMfiWx648BOgVWU
WVsh4m3Q6EewUuDO
ZT12d6l0RZR5O13SwrKFCBcgHrlI+up2UQuxG40UKZ
LJQP75R0Is2Wlo Tqk=

;; Received 665 bytes from 192.54.112.30#53(h.gtld-servers.net) in 1784 ms

maps.google.com. 300 IN A
172.217.17.142

;; Received 49 bytes from 216.239.32.10#53(ns1.google.com) in 1725 ms

[root@linuxfedora ~]#

Forwarding: just passes the DNS query to another DNS server (e.g. your ISP's). Home routers use forwarding to pass DNS queries from your home network's clients to your ISP's DNS servers. For example, for foo.example.com, a forwarding DNS server would first check its cache (did it already ask this question before), and if the answer is not in its cache, it would ask its forwarder (your ISP's DNS server) for the answer, which

would respond with either a cached response, or would perform recursion until it figured out the answer.

Recursion: the DNS server receiving the query takes it upon itself to figure out the answer to that query by recursively querying authoritative DNS servers for that domain. For example, for foo.example.com, a recursor would first query the root servers for what DNS servers are responsible for the .com TLD, then it would ask those servers for example.com, then it would query the servers for example.com for foo.example.com, finally getting the answer to the original query.

In terms of security, you should separate recursors/forwarders (typically DNS servers used to service a bunch of clients) and authoritative DNS servers (typically these are responsible ONLY for answering queries re: domains that they are authoritative for - these servers will NOT perform recursive queries for anyone).

http://www.tecmint.com/setup-master-slave-dns-server-in-centos/

DNS Cofiguration

My Testing Environment:

Master DNS Server

IP Address	:	192.168.7.122
Host-name	:	masterdns.raja.com
OS	:	Centos 6.6 Final

Slave DNS Server

IP Address	:	192.168.7.123
Host-name	:	slavedns.raja.com
OS	:	Centos 6.6 Final

Client Machine to use DNS

IP Address : 192.168.7.210

Host-name : node1.raja.com

OS : Centos 6.6 Final

Requirement Packages:

bind, bind-utils, bind-chroot

Configuration Files Used:

config file : /etc/named.conf

script file : /etc/init.d/named

Port & Protocols Used:53, UDP

Setup Master DNS Server

First, verify the IP address, Hostname and Distribution version of Master DNS Server, before moving forward for setup.

```
$ sudo ifconfig | grep inet
$ hostname
```

```
$ cat /etc/redhat-release

[root@linuxcent Desktop]# ifconfig eth0
eth0      Link encap:Ethernet  HWaddr 00:0C:29:50:2E:DE
          inet addr:192.168.7.122  Bcast:192.168.7.255  Mask:255.255.255.0
          inet6 addr: fe80::20c:29ff:fe50:2ede/64 Scope:Link
          UP BROADCAST RUNNING PROMISC MULTICAST  MTU:1500  Metric:1
          RX packets:8876 errors:0 dropped:0 overruns:0 frame:0
          TX packets:2392 errors:0 dropped:0 overruns:0 carrier:0
          collisions:0 txqueuelen:1000
          RX bytes:5333527 (5.0 MiB)  TX bytes:198221 (193.5 KiB)
          Interrupt:19 Base address:0x2000

[root@linuxcent Desktop]# hostname masterdns.raja.com
[root@masterdns Desktop]# hostname
masterdns.raja.com
[root@masterdns Desktop]#
```

[root@masterdns Desktop]# cat /etc/redhat-release

CentOS release 6.6 (Final)

[root@masterdns Desktop]# yum --skip-broken install bind* -y

Loaded plugins: aliases, changelog, downloadonly, fastestmirror, kabi, presto,

: refresh-packagekit, security, tmprepo, verify, versionlock

Loading support for CentOS kernel ABI

Setting up Install Process

Loading mirror speeds from cached hostfile

* base: mirrors.coreix.net

* epel: epel.scopesky.iq

* extras: mirrors.coreix.net

* remi: mirrors.netix.net

* rpmfusion-free-updates: kartolo.sby.datautama.net.id

* rpmfusion-nonfree-updates: kartolo.sby.datautama.net.id

* updates: mirrors.coreix.net

Resolving Dependencies

--> Running transaction check

---> Package bind.i686 32:9.8.2-0.30.rc1.el6 will be updated

---> Package bind.i686 32:9.8.2-0.47.rc1.el6_8.1 will be an update

---> Package bind-chroot.i686 32:9.8.2-0.30.rc1.el6 will be updated

---> Package bind-chroot.i686 32:9.8.2-0.47.rc1.el6_8.1 will be an update

---> Package bind-devel.i686 32:9.8.2-0.47.rc1.el6_8.1 will be installed

---> Package bind-dyndb-ldap.i686 0:2.3-5.el6 will be updated

---> Package bind-dyndb-ldap.i686 0:2.3-8.el6 will be an update

---> Package bind-libs.i686 32:9.8.2-0.30.rc1.el6 will be updated

---> Package bind-libs.i686 32:9.8.2-0.47.rc1.el6_8.1 will be an update

---> Package bind-license.noarch 32:9.9.4-18.el7 will be installed

---> Package bind-sdb.i686 32:9.8.2-0.47.rc1.el6_8.1 will be installed

---> Package bind-to-tinydns.i686 0:0.4.3-15.20140818gitdf0ddc3.el6 will be installed

---> Package bind-utils.i686 32:9.8.2-0.30.rc1.el6 will be updated

---> Package bind-utils.i686 32:9.8.2-0.47.rc1.el6_8.1 will be an update

--> Finished Dependency Resolution

Dependencies Resolved

==========

Package Arch Version Repository Size

==========

Installing:

bind-devel i686 32:9.8.2-0.47.rc1.el6_8.1 updates 383 k

bind-license noarch 32:9.9.4-18.el7 c7-media 80 k

bind-sdb i686 32:9.8.2-0.47.rc1.el6_8.1 updates 313 k

```
 bind-to-tinydns   i686     0.4.3-15.20140818gitdf0ddc3.el6
epel        18 k
Updating:
 bind                      i686          32:9.8.2-0.47.rc1.el6_8.1
updates    4.0 M
 bind-chroot               i686          32:9.8.2-0.47.rc1.el6_8.1
updates     75 k
 bind-dyndb-ldap   i686     2.3-8.el6                      base
71 k
 bind-libs                 i686          32:9.8.2-0.47.rc1.el6_8.1
updates    900 k
 bind-utils                i686          32:9.8.2-0.47.rc1.el6_8.1
updates    186 k

Transaction Summary
=========================================
=======================================
Install       4 Package(s)
Upgrade       5 Package(s)

Total download size: 6.0 M
Downloading Packages:
Setting up and reading Presto delta metadata
```

```
updates/prestodelta                                    | 160 kB
00:02

Processing delta metadata

Package(s) data still to download: 6.0 M

(1/9): bind-9.8.2-0.47.rc1.el6_8.1.i686.rpm                | 4.0
MB     02:27

(2/9): bind-chroot-9.8.2-0.47.rc1.el6_8.1.i686.rpm          |
75 kB     00:00

(3/9): bind-devel-9.8.2-0.47.rc1.el6_8.1.i686.rpm           |
383 kB     00:06

(4/9): bind-dyndb-ldap-2.3-8.el6.i686.rpm                   |  71
kB     00:00

(5/9): bind-libs-9.8.2-0.47.rc1.el6_8.1.i686.rpm           | 900
kB     00:17

(7/9): bind-sdb-9.8.2-0.47.rc1.el6_8.1.i686.rpm            | 313
kB     00:05

(8/9): bind-to-tinydns-0.4.3-15.20140818gitdf0ddc3.el6.i |
18 kB     00:00

(9/9): bind-utils-9.8.2-0.47.rc1.el6_8.1.i686.rpm          | 186
kB     00:03

--------------------------------------------------------------------------
----------

Total                                   33 kB/s | 6.0 MB     03:08
```

Running rpm_check_debug

Running Transaction Test

Transaction Test Succeeded

Running Transaction

Installing : 32:bind-license-9.9.4-18.el7.noarch 1/14

Updating : 32:bind-libs-9.8.2-0.47.rc1.el6_8.1.i686 2/14

Installing : 32:bind-devel-9.8.2-0.47.rc1.el6_8.1.i686 3/14

Updating : 32:bind-9.8.2-0.47.rc1.el6_8.1.i686 4/14

warning: /etc/named.conf created as /etc/named.conf.rpmnew

Updating : 32:bind-chroot-9.8.2-0.47.rc1.el6_8.1.i686 5/14

Updating : bind-dyndb-ldap-2.3-8.el6.i686 6/14

Installing : 32:bind-sdb-9.8.2-0.47.rc1.el6_8.1.i686 7/14

Updating : 32:bind-utils-9.8.2-0.47.rc1.el6_8.1.i686 8/14

Installing : bind-to-tinydns-0.4.3-15.20140818gitdf0ddc3.el6.i686 9/14

Cleanup : bind-dyndb-ldap-2.3-5.el6.i686 10/14

Cleanup : 32:bind-chroot-9.8.2-0.30.rc1.el6.i686 11/14

Cleanup : 32:bind-9.8.2-0.30.rc1.el6.i686 12/14

Cleanup : 32:bind-utils-9.8.2-0.30.rc1.el6.i686 13/14

Cleanup : 32:bind-libs-9.8.2-0.30.rc1.el6.i686 14/14

Verifying : 32:bind-sdb-9.8.2-0.47.rc1.el6_8.1.i686 1/14

Verifying : 32:bind-license-9.9.4-18.el7.noarch 2/14

Verifying : bind-to-tinydns-0.4.3-15.20140818gitdf0ddc3.el6.i686 3/14

Verifying : 32:bind-9.8.2-0.47.rc1.el6_8.1.i686 4/14

Verifying : bind-dyndb-ldap-2.3-8.el6.i686 5/14

Verifying : 32:bind-libs-9.8.2-0.47.rc1.el6_8.1.i686 6/14

Verifying : 32:bind-utils-9.8.2-0.47.rc1.el6_8.1.i686 7/14

Verifying : 32:bind-chroot-9.8.2-0.47.rc1.el6_8.1.i686 8/14

Verifying : 32:bind-devel-9.8.2-0.47.rc1.el6_8.1.i686 9/14

Verifying : 32:bind-libs-9.8.2-0.30.rc1.el6.i686 10/14

Verifying : 32:bind-chroot-9.8.2-0.30.rc1.el6.i686 11/14

Verifying : 32:bind-9.8.2-0.30.rc1.el6.i686 12/14

Verifying : bind-dyndb-ldap-2.3-5.el6.i686 13/14

Verifying : 32:bind-utils-9.8.2-0.30.rc1.el6.i686 14/14

Installed:

bind-devel.i686 32:9.8.2-0.47.rc1.el6_8.1

bind-license.noarch 32:9.9.4-18.el7

bind-sdb.i686 32:9.8.2-0.47.rc1.el6_8.1

bind-to-tinydns.i686 0:0.4.3-15.20140818gitdf0ddc3.el6

Updated:

bind.i686 32:9.8.2-0.47.rc1.el6_8.1

bind-chroot.i686 32:9.8.2-0.47.rc1.el6_8.1

bind-dyndb-ldap.i686 0:2.3-8.el6

bind-libs.i686 32:9.8.2-0.47.rc1.el6_8.1

bind-utils.i686 32:9.8.2-0.47.rc1.el6_8.1

Complete!

[root@masterdns Desktop]#

Installing and Configuring Bind

[root@masterdns Desktop]# vim /etc/named.conf

[root@masterdns Desktop]# cat /etc/named.conf

//

// named.conf

//

// Provided by Red Hat bind package to configure the ISC BIND named(8) DNS

// server as a caching only nameserver (as a localhost DNS resolver only).

```
//
// See /usr/share/doc/bind*/sample/ for example named configuration files.
//

options {
        listen-on port 53 { 127.0.0.1; 192.168.7.122; };#Here we need to add our DNS Server IP or Master DNS Server
        listen-on-v6 port 53 { ::1; };
        directory       "/var/named";
        dump-file       "/var/named/data/cache_dump.db";
      statistics-file "/var/named/data/named_stats.txt";
      memstatistics-file "/var/named/data/named_mem_stats.txt";
        allow-query     { localhost; 192.168.7.0/24; };# subnet range where my hosts are allowed to query our DNS
        #allow-transfer  { localhost; 192.168.7.123; }; # Here we need to our Slave DNS server IP.
        recursion no;

        dnssec-enable yes;
```

```
        dnssec-validation yes;
        dnssec-lookaside auto;

        /* Path to ISC DLV key */
        bindkeys-file "/etc/named.iscdlv.key";

        managed-keys-directory "/var/named/dynamic";
};

logging {
    channel default_debug {
        file "data/named.run";
        severity dynamic;
    };
};

# Note: If you want to your DNS Server able to ask root
DNS Server Uncomment Bellow lines and set reursion to
yes.
#zone "." IN {
#       type hint;
```

```
#       file "named.ca";
#};



zone "raja.com" IN {
        type master;
        file "raja.com.zone";
        allow-update { none; };
        allow-transfer { none; };
};

# Note: if you want to have reverse zone uncomment
bellow lines.
#zone "7.168.192.in-addr.arpa" IN {
#       type master;
#       file "raja.com.rev.zone";
#       allow-update { none; };
#};

include "/etc/named.rfc1912.zones";
include "/etc/named.root.key";
```

[root@masterdns Desktop]#

Following are the explanation of each configuration we used in above file.

- listen-on port 53 – This is used for the DNS to listen in available interfaces.
- Master DNS – Define, your Master DNS IP address to listen the query.
- Slave DNS – Define your Slave DNS, which is used to sync our zone information to resolve the hosts from Master.
- recursion no – If its set to yes, recursive queries will make the server into DDOS attack.
- Zone Name – Define your Zone name here defined as tecminlocal.com.
- type master – As this system was configured for a master server, for upcoming slave server this will be slave.
- raja.com.zone – This file have the host information for this zone.
- allow-update none – If none will set. it won't use Dynamic DNS (DDNS).

```
[root@masterdns Desktop]# cat /var/named/named.localhost
$TTL 1D
@       IN SOA      @ rname.invalid. (
                                    0       ; serial
                                    1D      ; refresh
                                    1H      ; retry
                                    1W      ; expire
                                    3H )    ; minimum
        NS      @
        A       127.0.0.1
        AAAA    ::1
[root@masterdns Desktop]# cat /var/named/named.loopback
$TTL 1D
@       IN SOA      @ rname.invalid. (
                                    0       ; serial
                                    1D      ; refresh
                                    1H      ; retry
                                    1W      ; expire
```

```
                                        3H )    ; minimum
        NS      @
        A       127.0.0.1
        AAAA ::1
        PTR     localhost.
[root@masterdns Desktop]#
```

```
cp /var/named/named.localhost /var/named/raja.com.zone
cp /var/named/named.loopback /var/named/raja.com.rev.zone
```

```
vim /var/named/raja.com.zone
$TTL 86400
@       IN SOA  masterdns.raja.com.     root.raja.com. (
2016060601    ; serial
3600    ; refresh
1800    ; retry
604800    ; expire
86400 )  ; minimum
; Name server's
@       IN      NS      masterdns.raja.com.
```

#Note:if you have slave name server uncomment the followed commented line

#@ IN NS slavedns.raja.com.

; Name server hostname to IP resolve.

@ IN A 192.168.7.122

#@ IN A 192.168.7.123

; Hosts in this Domain

@ IN A 192.168.7.210

@ IN A 192.168.7.220

masterdns IN A 192.168.7.122

#slavedns IN A 192.168.7.123

node1 IN A 192.168.0.210

rhel1 IN A 192.168.0.220

$TTL 86400

[root@masterdns Desktop]# vim /var/named/raja.com.rev.zone

[root@masterdns Desktop]# cat /var/named/raja.com.rev.zone

$TTL 86400

@ IN SOA masterdns.raja.com. root.raja.com. (

```
2016060602      ; serial
3600      ; refresh
1800      ; retry
604800      ; expire
86400 )    ; minimum
; Name server's
@       IN      NS      masterdns.raja.com.
@       IN      NS      slavedns.raja.com.
@       IN      PTR     raja.com.
; Name server hostname to IP resolve.
masterdns       IN      A       192.168.7.122
slavedns        IN      A       192.168.7.123
;Hosts in Domain
node1           IN      A       192.168.0.210
rhel            IN      A       192.168.0.220
122             IN      PTR     masterdns.raja.com.
123             IN      PTR     slavedns.raja.com.
210             IN      PTR     node1.raja.com.
220             IN      PTR     rhel1.raja.com.
[root@masterdns Desktop]#
```

#####Check the group ownership of forward look-up & reverse look-up files, before checking for any errors in configuration.

```
[root@masterdns Desktop]# ls -l /var/named/
total 44
drwxr-x---. 6 root  named 4096 Sep 28 14:21 chroot
drwxrwx---. 2 named named 4096 Oct  6 14:40 data
drwxrwx---. 2 named named 4096 Oct  6 20:12 dynamic
-rw-r--r--  1 root  root  1287 May 11 2013 linuxcbt.internal.zone
-rw-r-----  1 root  named 3171 Jan 11  2016 named.ca
-rw-r-----  1 root  named  152 Dec 15  2009 named.empty
-rw-r-----  1 root  named  152 Jun 21 2007 named.localhost
-rw-r-----  1 root  named  168 Dec 15 2009 named.loopback
-rw-r--r--  1 root  root   745 Oct  6 21:02 raja.com.rev.zone
-rw-r--r--  1 root  root   742 Oct  6 20:58 raja.com.zone
drwxrwx---. 2 named named 4096 Sep 28 14:21 slaves
[root@masterdns Desktop]#
```

####Here we can see both the files are in root users ownership, because files which we makes a copy from sample files are available under /var/named/. Change the group to named on both files using following commands.

[root@masterdns Desktop]# chgrp named /var/named/raja.com.rev.zone

[root@masterdns Desktop]# chgrp named /var/named/raja.com.zone

[root@masterdns Desktop]# ls -l /var/named/

total 44

drwxr-x---. 6 root named 4096 Sep 28 14:21 chroot

drwxrwx---. 2 named named 4096 Oct 6 14:40 data

drwxrwx---. 2 named named 4096 Oct 6 20:12 dynamic

-rw-r--r-- 1 root root 1287 May 11 2013 linuxcbt.internal.zone

-rw-r----- 1 root named 3171 Jan 11 2016 named.ca

-rw-r----- 1 root named 152 Dec 15 2009 named.empty

-rw-r----- 1 root named 152 Jun 21 2007 named.localhost

-rw-r----- 1 root named 168 Dec 15 2009 named.loopback

-rw-r--r-- 1 root named 745 Oct 6 21:02 raja.com.rev.zone

-rw-r--r-- 1 root named 742 Oct 6 20:58 raja.com.zone

drwxrwx---. 2 named named 4096 Sep 28 14:21 slaves

[root@masterdns Desktop]#

#####Now, check for the errors in zone files, before starting the DNS service. First check the named.conf file, then check other zone files.

[root@masterdns Desktop]# named-checkconf /etc/named.conf

[root@masterdns Desktop]# echo $?

0

[root@masterdns Desktop]# named-checkzone masterdns.raja.com /var/named/raja.com.zone

/var/named/raja.com.zone:10: unknown RR type 'you'

/var/named/raja.com.zone:14: #\@.masterdns.raja.com: bad owner name (check-names)

/var/named/raja.com.zone:19: #slavedns.masterdns.raja.com: bad owner name (check-names)

zone masterdns.raja.com/IN: loading from master file /var/named/raja.com.zone failed: unknown class/type

zone masterdns.raja.com/IN: not loaded due to errors.

```
[root@masterdns Desktop]#

[root@masterdns Desktop]# vim /var/named/raja.com.zone
[root@masterdns Desktop]# cat /var/named/raja.com.zone
$TTL 86400
@       IN SOA  masterdns.raja.com.     root.raja.com. (
2016060601    ; serial
3600    ; refresh
1800    ; retry
604800    ; expire
86400 )  ; minimum
; Name server's
@       IN      NS      masterdns.raja.com.
; Name server hostname to IP resolve.
@       IN      A       192.168.7.122
; Hosts in this Domain
@       IN      A       192.168.7.210
@       IN      A       192.168.7.220
masterdns       IN      A       192.168.7.122
```

node1 IN A 192.168.7.210

rhel1 IN A 192.168.7.220

[root@masterdns Desktop]#

[root@masterdns Desktop]# named-checkzone masterdns.raja.com /var/named/raja.com.zone

zone masterdns.raja.com/IN: loaded serial 2016060601

OK

[root@masterdns Desktop]#

[root@masterdns Desktop]# named-checkzone masterdns.raja.com /var/named/raja.com.rev.zone

zone masterdns.raja.com/IN: NS 'masterdns.raja.com' has no address records (A or AAAA)

zone masterdns.raja.com/IN: not loaded due to errors.

[root@masterdns Desktop]#

Note: Solve The problem same to prior

#####By default iptables was running and our DNS server is restricted to localhost, if client wants to resolve name from our DNS Server, then we have to allow the inbound

request, for that we need to add iptables inbound rule for the port 53.

[root@masterdns Desktop]# iptables -I INPUT -p udp --dport 53 -m state --state NEW -j ACCEPT

[root@masterdns Desktop]# iptables -L INPUT

Chain INPUT (policy ACCEPT)

target prot opt source destination

ACCEPT udp -- anywhere anywhere udp dpt:domain state NEW

ACCEPT udp -- anywhere anywhere udp dpt:domain

ACCEPT tcp -- anywhere anywhere tcp dpt:domain

ACCEPT udp -- anywhere anywhere udp dpt:bootps

ACCEPT tcp -- anywhere anywhere tcp dpt:bootps

ACCEPT all -- anywhere anywhere state RELATED,ESTABLISHED

ACCEPT icmp -- anywhere anywhere

ACCEPT all -- anywhere anywhere

```
ACCEPT     tcp  --  anywhere            anywhere
state NEW tcp dpt:ssh
ACCEPT     tcp  --  anywhere            anywhere
state NEW tcp dpt:smtp
ACCEPT     tcp  --  anywhere            anywhere
state NEW tcp dpt:pop3
ACCEPT     udp  --  anywhere            anywhere
state NEW udp dpt:ipp
ACCEPT     udp  --  anywhere            224.0.0.251
state NEW udp dpt:mdns
ACCEPT     tcp  --  anywhere            anywhere
state NEW tcp dpt:ipp
ACCEPT     udp  --  anywhere            anywhere
state NEW udp dpt:ipp
ACCEPT     tcp  --  anywhere            anywhere
state NEW tcp dpt:http
ACCEPT     tcp  --  anywhere            anywhere
state NEW tcp dpt:https
REJECT     all  --  anywhere            anywhere
reject-with icmp-host-prohibited

[root@masterdns Desktop]# service iptables save
iptables: Saving firewall rules to /etc/sysconfig/iptables:[
OK  ]
```

[root@masterdns Desktop]# service iptables restart

iptables: Setting chains to policy ACCEPT: nat mangle filte[OK]

iptables: Flushing firewall rules: [OK]

iptables: Unloading modules: [OK]

iptables: Applying firewall rules: [OK]

[root@masterdns Desktop]#

Start the named service and make it persistent.

[root@masterdns Desktop]# service named start

Starting named: named: already running [OK]

[root@masterdns Desktop]# service named restart

Stopping named: .umount: /var/named/chroot/var/named: device is busy.

(In some cases useful info about processes that use

the device is found by lsof(8) or fuser(1))

[OK]

Starting named: [OK]

[root@masterdns Desktop]# chkconfig named on

[root@masterdns Desktop]# chkconfig --list named

```
named           0:off    1:off    2:on     3:on     4:on     5:on
        6:off
[root@masterdns Desktop]#
```

Finally, test the configured Master DNS zone files (forward and reverse), using dig & nslookup tools.

```
[root@masterdns Desktop]# vim /etc/resolv.conf
[root@masterdns Desktop]# cat /etc/resolv.conf
# Generated by NetworkManager
search linuxcbt.internal
nameserver 192.168.7.122
#nameserver 8.8.8.8
[root@masterdns Desktop]#

[root@masterdns Desktop]# dig masterdns.raja.com

; <<>> DiG 9.8.2rc1-RedHat-9.8.2-0.47.rc1.el6_8.1 <<>>
masterdns.raja.com
;; global options: +cmd
;; Got answer:
```

```
;; ->>HEADER<<- opcode: QUERY, status: NOERROR, id: 25252
;; flags: qr aa rd; QUERY: 1, ANSWER: 1, AUTHORITY: 1, ADDITIONAL: 0
;; WARNING: recursion requested but not available

;; QUESTION SECTION:
;masterdns.raja.com.            IN      A

;; ANSWER SECTION:
masterdns.raja.com.    86400  IN      A
        192.168.7.122

;; AUTHORITY SECTION:
raja.com.              86400  IN      NS
        masterdns.raja.com.

;; Query time: 43 msec
;; SERVER: 192.168.7.122#53(192.168.7.122)
;; WHEN: Thu Oct  6 21:20:28 2016
;; MSG SIZE  rcvd: 66
```

[root@masterdns Desktop]#

For Reverse Query

[root@masterdns Desktop]# dig -x 192.168.7.122

; <<>> DiG 9.8.2rc1-RedHat-9.8.2-0.47.rc1.el6_8.1 <<>> -x 192.168.7.122

;; global options: +cmd

;; Got answer:

;; ->>HEADER<<- opcode: QUERY, status: REFUSED, id: 16320

;; flags: qr rd; QUERY: 1, ANSWER: 0, AUTHORITY: 0, ADDITIONAL: 0

;; WARNING: recursion requested but not available

;; QUESTION SECTION:

;122.7.168.192.in-addr.arpa. IN PTR

;; Query time: 16 msec

;; SERVER: 192.168.7.122#53(192.168.7.122)

;; WHEN: Thu Oct 6 21:21:34 2016

```
;; MSG SIZE  rcvd: 44

[root@masterdns Desktop]#

[root@masterdns Desktop]# nslookup raja.com
Server:         192.168.7.122
Address:        192.168.7.122#53

Name: raja.com
Address: 192.168.7.220
Name: raja.com
Address: 192.168.7.122
Name: raja.com
Address: 192.168.7.210

[root@masterdns Desktop]# nslookup masterdns.raja.com
Server:         192.168.7.122
Address:        192.168.7.122#53

Name: masterdns.raja.com
Address: 192.168.7.122
```

[root@masterdns Desktop]#

Setup Slave DNS Server

In Slave machine, also we need to install same bind packages as shown in Master, so let's install them using following command.

$ sudo yum install bind* -y

$ sudo vim /etc/named.conf

Make changes as shown, as per your requirements.

//

// named.conf

//

// Provided by Red Hat bind package to configure the ISC BIND named(8) DNS

// server as a caching only nameserver (as a localhost DNS resolver only).

```
//
// See /usr/share/doc/bind*/sample/ for example named configuration files.
//
options {
listen-on port 53 { 127.0.0.1; 192.168.7.123}; # Our Slave DNS server IP
listen-on-v6 port 53 { ::1; };
directory       "/var/named";
dump-file       "/var/named/data/cache_dump.db";
statistics-file "/var/named/data/named_stats.txt";
memstatistics-file "/var/named/data/named_mem_stats.txt";
allow-query     { localhost; 192.168.7.0/24; };
recursion no;
dnssec-enable yes;
dnssec-validation yes;
dnssec-lookaside auto;
/* Path to ISC DLV key */
bindkeys-file "/etc/named.iscdlv.key";
managed-keys-directory "/var/named/dynamic";
```

```
};
logging {
channel default_debug {
file "data/named.run";
severity dynamic;
};
};
zone "." IN {
type hint;
file "named.ca";
};
## Define our slave forward and reverse zone, Zone files
are replicated from master.
zone"raja.com" IN {
type slave;
file "slaves/raja.com.zone";
masters { 192.168.7.122; };
};
zone"7.168.192.in-addr.arpa" IN {
type slave;
file "slaves/raja.com.rev.zone";
```

```
masters { 192.168.7.122; };
};
#####
include "/etc/named.rfc1912.zones";
include "/etc/named.root.key";

$ sudo service named start
$ sudo ls -l /var/named/slaves

$ sudo cat /var/named/slaves/raja.com.zone

$ sudo cat /var/named/slaves/raja.com.rev.zone

$ sudo iptables -I INPUT -p udp --dport 53 -m state --state
NEW -j ACCEPT
```

Save the iptables rules and restart the iptables service.

```
$ sudo service iptables save
$ sudo service iptables restart
```

Make the service persistent on system boot.

$ sudo chkconfig iptables on

Check whether persistent set for run-levels .

$ sudo chkconfig --list iptables

Configure Client Machine

In client side we need to assign the Primary (192.168.7.122) and Secondary DNS (192.168.7.123) entry in network settings to get assign a hostname. To do, run the setup command to define all these entries as shown in the picture.

$ setup

Else, edit the '/etc/reslov.conf' file and add the following entries.

$ vim /etc/resolv.conf

```
search raja.com
nameserver 192.168.7.122
nameserver 192.168.7.123

$ ifconfig | grep inet
$ hostname
$ nslookup raja.com
```

Now, check the forward & Reverse DNS look-up using.

```
$ dig masterdns.raja.com
$ dig -x 192.168.7.122
```

Understaing the dig Output:

- Header – This says everything what we have asked and how the result was.
- Status – Status was NO ERROR, that means which query request sent by us was successful without any ERROR.

- Question – The Query which was made by us, here my query was masterdns.raja.com.
- Answer – The Query request resolved if there is available information.
- Authority – The name servers response for the domain and zone.
- Additional – Additional info's regarding name-servers such as host-name and IP address.
- Query time – How long it took for resolving the names from the above servers.

Finally check for our node and make a ping.

```
$ dig node1.raja.com

$ ping masterdns.raja.com -c 2
$ ping slavedns.raja.com -c 2
$ ping 192.168.7.122 -c 2
$ ping 192.168.7.123 -c 2
```